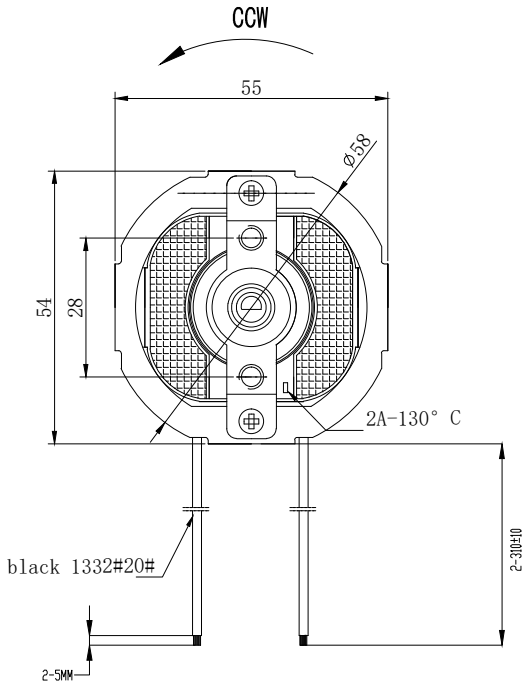

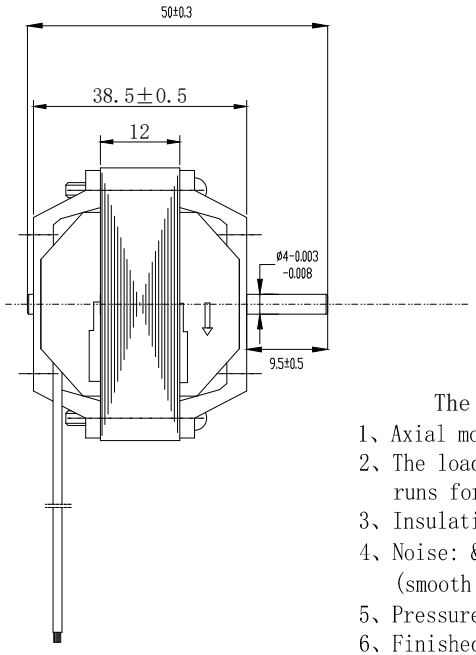

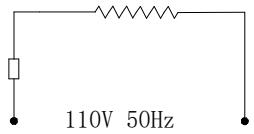

(The public side)　　High quality

Motor wiring schematic diagram

The technical requirements

1、Axial movement (virtual): 0.2-0.8mm。
2、The load performance is tested after the motor runs for 1 minute。
3、Insulation class: E.
4、Noise: & lt; 60dB(no load, distance 30CM,), (smooth sound without abnormal noise).
5、Pressure test 1800V/1S passed.
6、Finished motor shaft coated with special anti-rust oil.

Electrical performance (tested at room temperature):

The power supply			No-load performance			Load performance		
voltage (VAC)	frequency (Hz)	gears	current (Amp)	The input power (Watts)	speed (rpm)	current (Amp)	The input power (Watts)	speed (rpm)
110	50	High quality	0.22±10%	15±10%	≥2700			

版本	更改内容	日期
A	首次发放。	2022.03.01

材料

表面处理

未注公差对照表

0°		0	
0.0°	±5.0°	0.0	±0.5
0.00°		0.00	

以图纸标注尺寸为准

单位: mm　比例: NTS

标题 58-12J-22001外形图

设计

审核

批准

图纸编号:　第 1 页，共 1 页　版本号: A

表号：JL-JS-003